Resource Allocation Algorithms Design for 5G Wireless Networks

Vincent Wong
Department of Electrical and Computer Engineering
The University of British Columbia

November 5, 2016

5G Overview

User Data Rate
0.1 – 1 Gbps

- UHD 3D Video
- Augmented Reality
- Mobile Cloud

Traffic

1000K
Connections/km^2

- M2M Devices
- Wearables
- Smart Phones

Devices

E2E Latency
< 10 ms

- Smart Home
- Industry
- e-Health
- Energy
- Transportation

Applications

3GPP Use Cases

- Enhanced Mobile Broadband (eMBB)

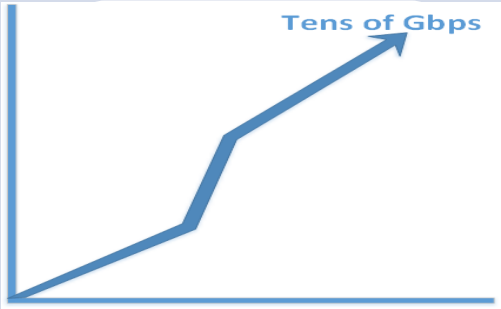

Devices
- Smart Phones
- Tablets

Applications
- UHD 3D Video Streaming
- Virtual / Augmented Reality
- Mobile Cloud / Cloud Gaming

Requirements
- Peak Data Rate ~ Tens of Gbps
- User Data Rate ~ 0.1-1 Gbps

3GPP Use Cases

- Massive Machine-type Communications (mMTC)

Devices

- Wearables
- Smart Home Appliances
- Smart Traffic Signs / Lights
- Sensors

Applications

- Home Automation
- Intelligent Transportation Systems
- Asset Tracking
- Environmental Monitoring

Requirements

- High Connection Density ~ 1000K Devices per km^2
- Extended Battery Lifetime ~ 15 Years

3GPP Use Cases

- Ultra-Reliable Low Latency Communications (URLLC)

Devices

- Autonomous Vehicles
- Health Monitoring Devices
- Remote Surgery Robotics
- Industrial Sensors and Actuators

Applications

- e-Health
- Industrial Automation
- Autonomous Driving

Requirements

- High Reliability Rate ~ 0.99999
- Low E2E Latency ~ < 10 ms

Key Technologies Filling the Gap

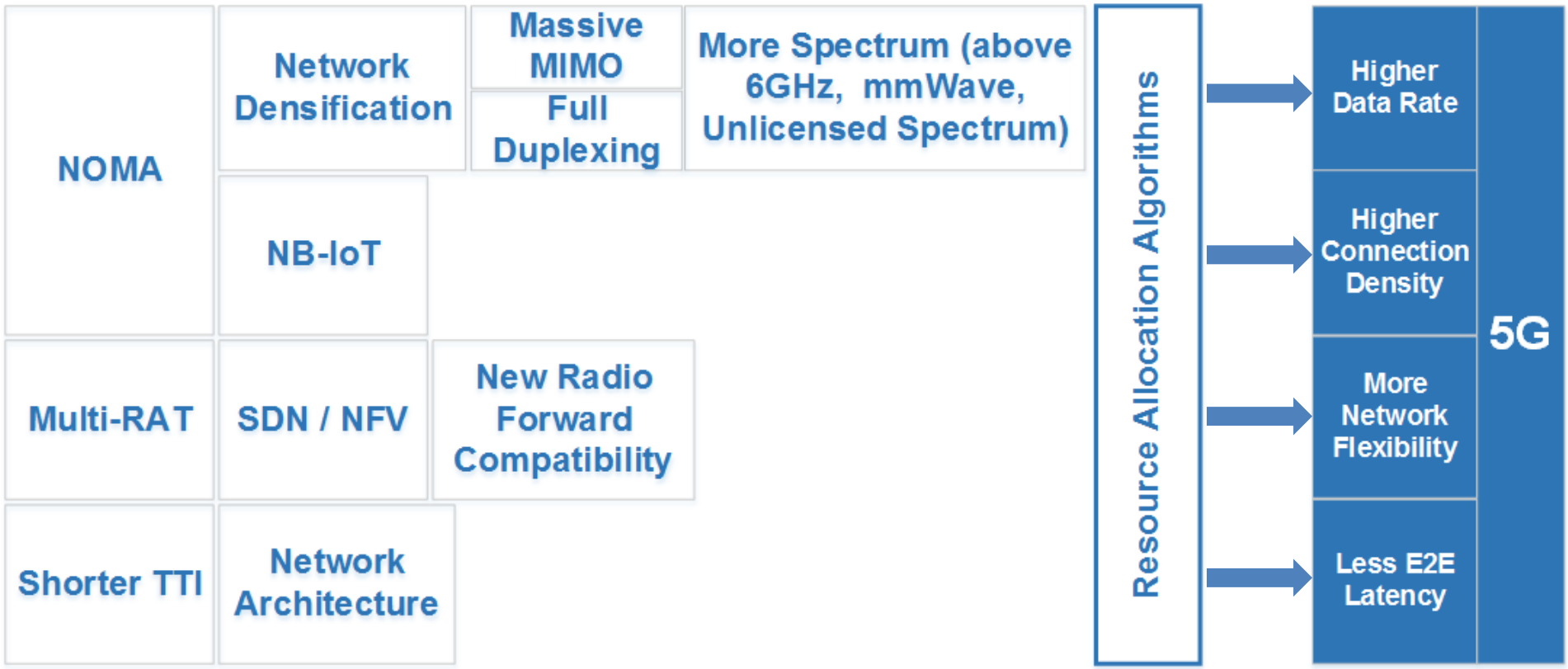

5G Network Architecture

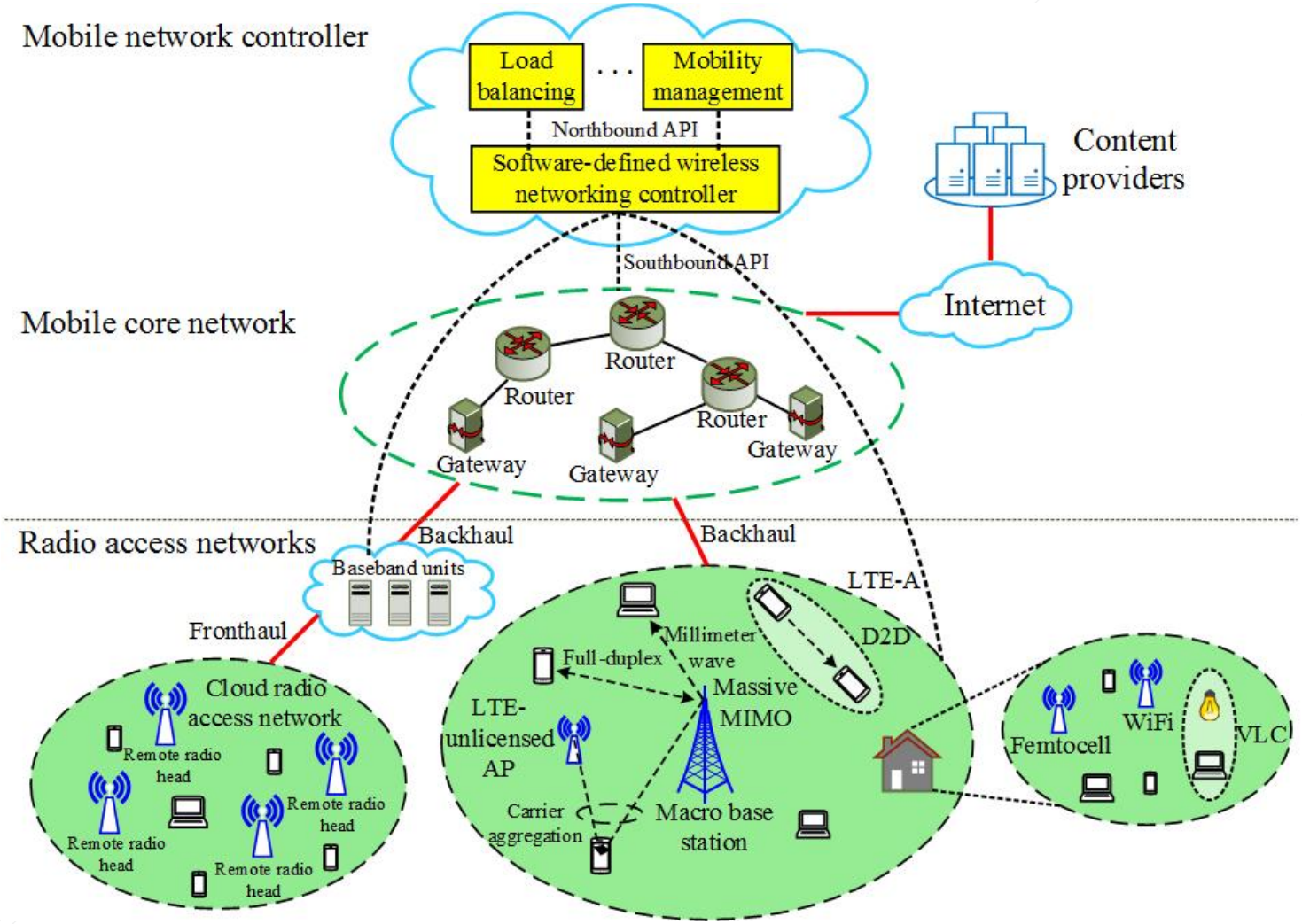

Cloud Radio Access Network (C-RAN) Architecture

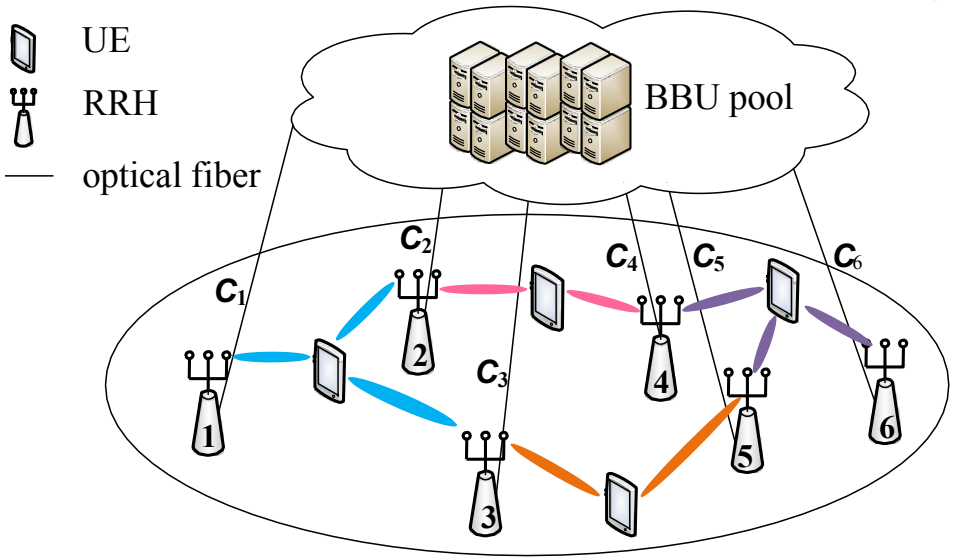

- Decouple the baseband unit (BBU) and the remote radio head (RRH)
- Place BBUs in a data center for centralized control and processing
- Reduce CAPEX and OPEX for system upgrade and maintenance
- Improve spectral efficiency via centralized interference control and coordinated multi-point transmission (CoMP)

Network Slicing

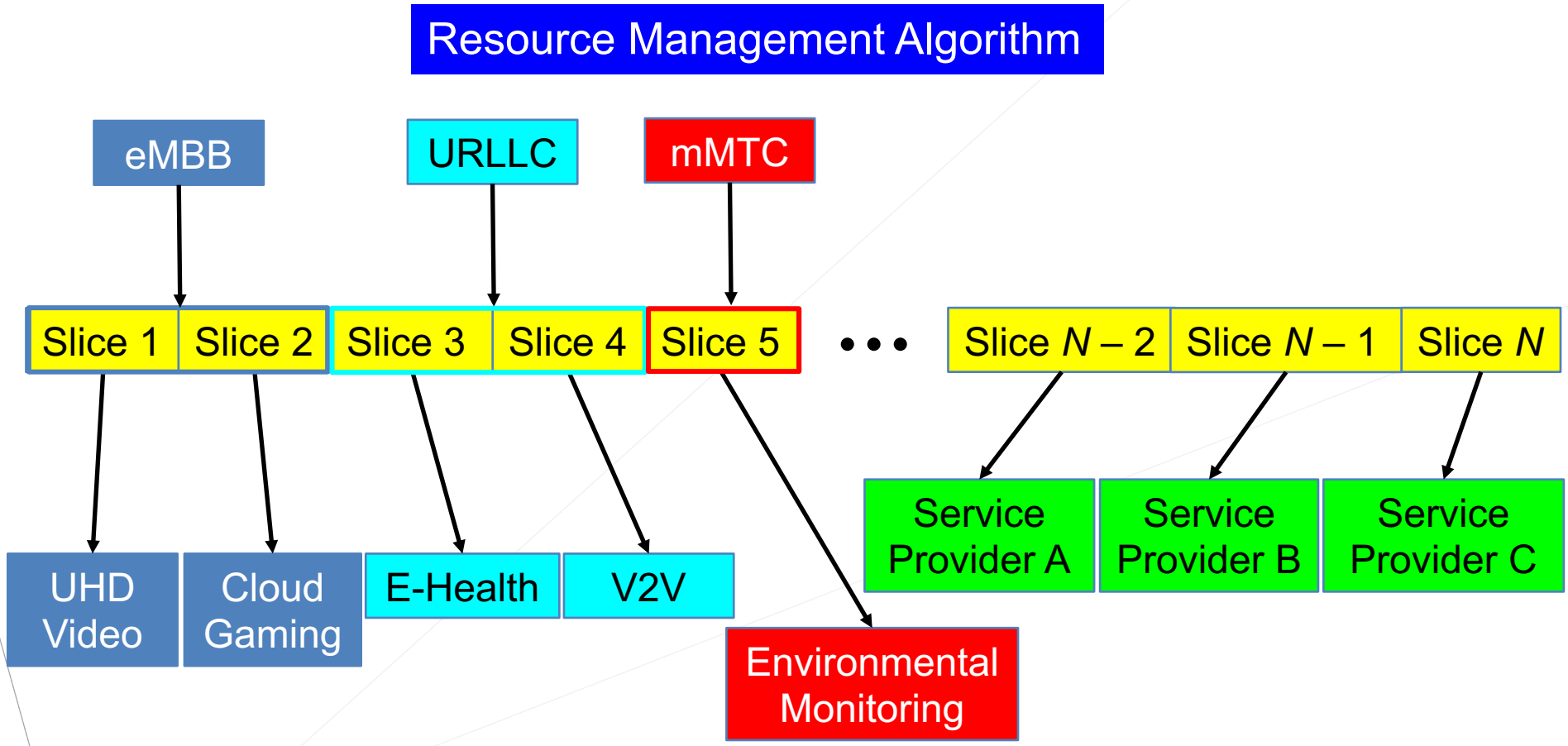

- Enables flexible and dynamic slicing of network resources

Problem Statement 1: User-Centric Resource Sharing for C-RAN

- Goal
  - Quality of service guarantee
  - Service isolation
  - Traffic variation, user mobility
- Given
  - Set of service providers
  - Capacity of fronthaul links
- Variables
  - Time slot, channel allocation
  - User association
- Techniques
  - Mixed integer non-linear programming
- Multi-timescale resource allocation
  - Global (local) resource allocation at longer (smaller) time scale

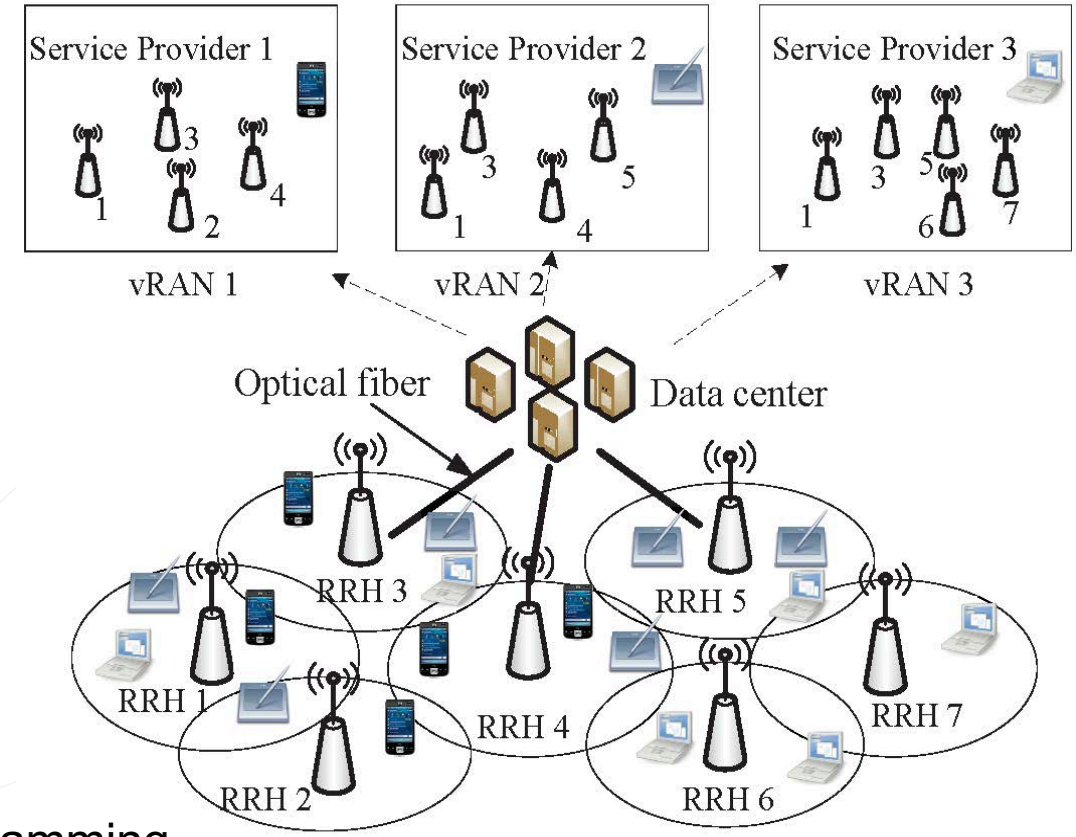

Problem Statement 2: Beamforming Design in C-RAN

- Goal
  - Maximize users' satisfaction
  - SINR and power constraints
- Given
  - Set of users and RRHs
  - Capacity of fronthaul links
  - Imperfect CSI
- Variables
  - Beamforming vector for each user
- Techniques
  - Non-linear programming
  - Convex relaxation
  - Semidefinite programming

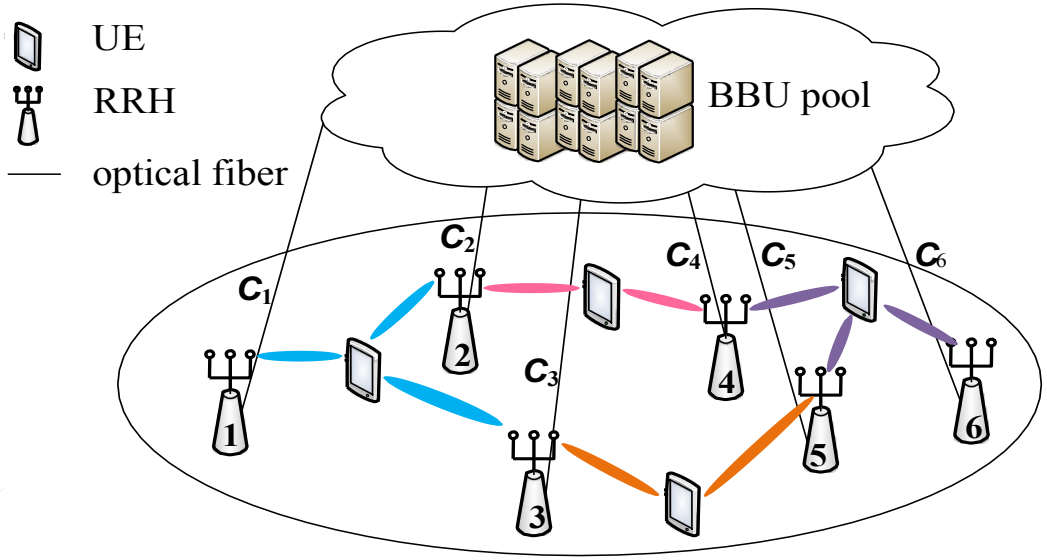

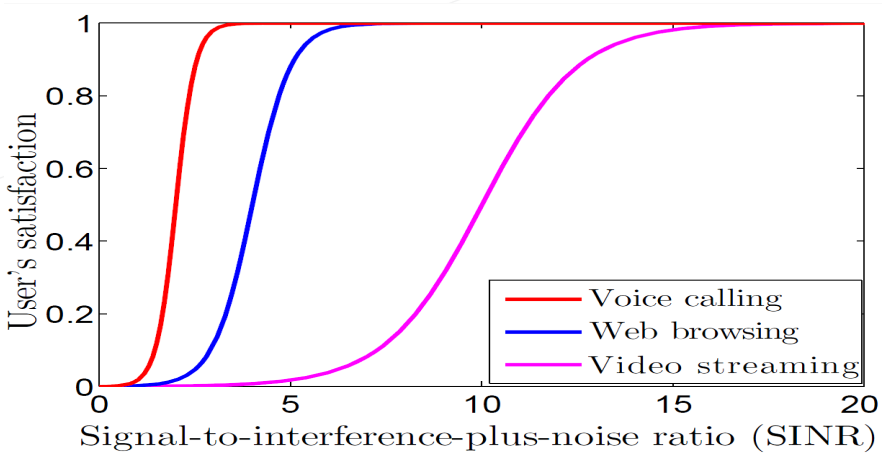

Problem Statement 3: Non-Orthogonal Multiple Access (NOMA) for Narrowband IoT Systems

- Goal
  - Maximize connection density
- Given
  - Set of mMTC, URLLC devices
  - NB-IoT specification
  - Latency and power requirement
- Variables
  - Sub-carrier allocation
  - Transmit power
- Techniques
  - Non-orthogonal multiple access (NOMA)
  - Combinatorial optimization

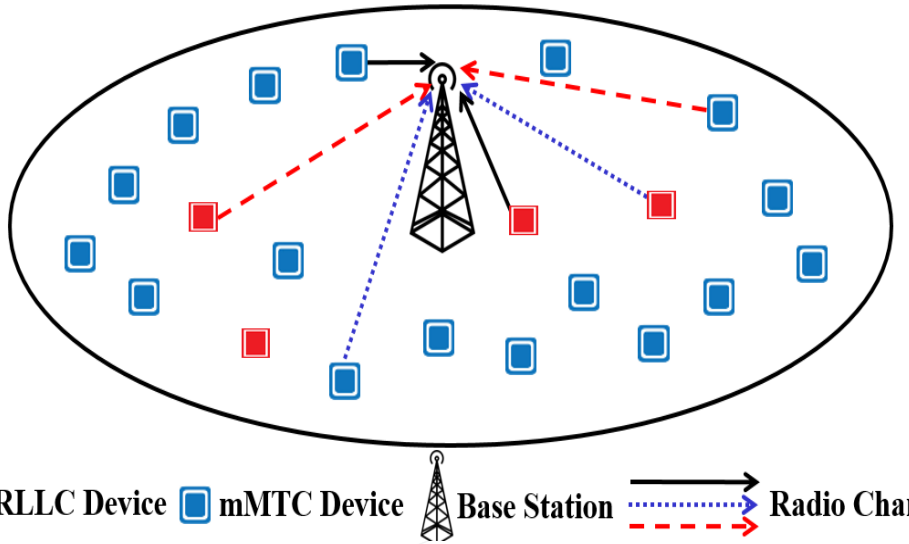

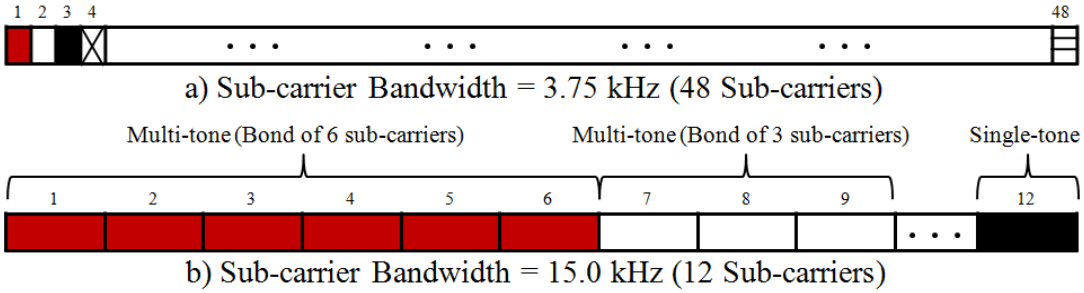

Sample Publications in Wireless Networking in 2016

- B. Niu *et al*., “A Dynamic Resource Sharing Mechanism for Cloud Radio Access Networks,” *IEEE Trans. on Wireless Communications*, 2016.
- Z. Wang *et al*., “How to Download More Data from Neighbors? A Metric for D2D Data Offloading Opportunity,” *IEEE Trans. on Mobile Computing*, 2016.
- B. Ma *et al*., “Multimedia Content Delivery in Millimeter Wave Home Networks,” *IEEE Trans. on Wireless Communications*, 2016.
- S. Duan *et al*., “D-ACB: Adaptive Congestion Control Algorithm for Bursty M2M Traffic in LTE Networks,” *IEEE Trans. on Vehicular Technology*, 2016.
- L. Xiang *et al*., “Cache-Enabled Physical-Layer Security for Video Streaming in Wireless Networks with Limited Backhauls,” in *Proc. of IEEE GLOBECOM Workshop*, Dec. 2016.
- Z. Wang *et al*., “Transmit Beamforming for QoE Improvement in C-RAN with Mobile Virtual Network Operators,” in *Proc. of IEEE Int’l Conf. on Communications (ICC)*, May 2016.
- B. Ma *et al*., “A Matching Approach for Power Efficient Relay Selection in Full Duplex D2D Networks,” in *Proc. of IEEE Int’l Conf. on Communications (ICC)*, May 2016.

http://www.ece.ubc.ca/~vincentw/Homepage/Publication.html

Forthcoming Edited Book in 5G Wireless Systems

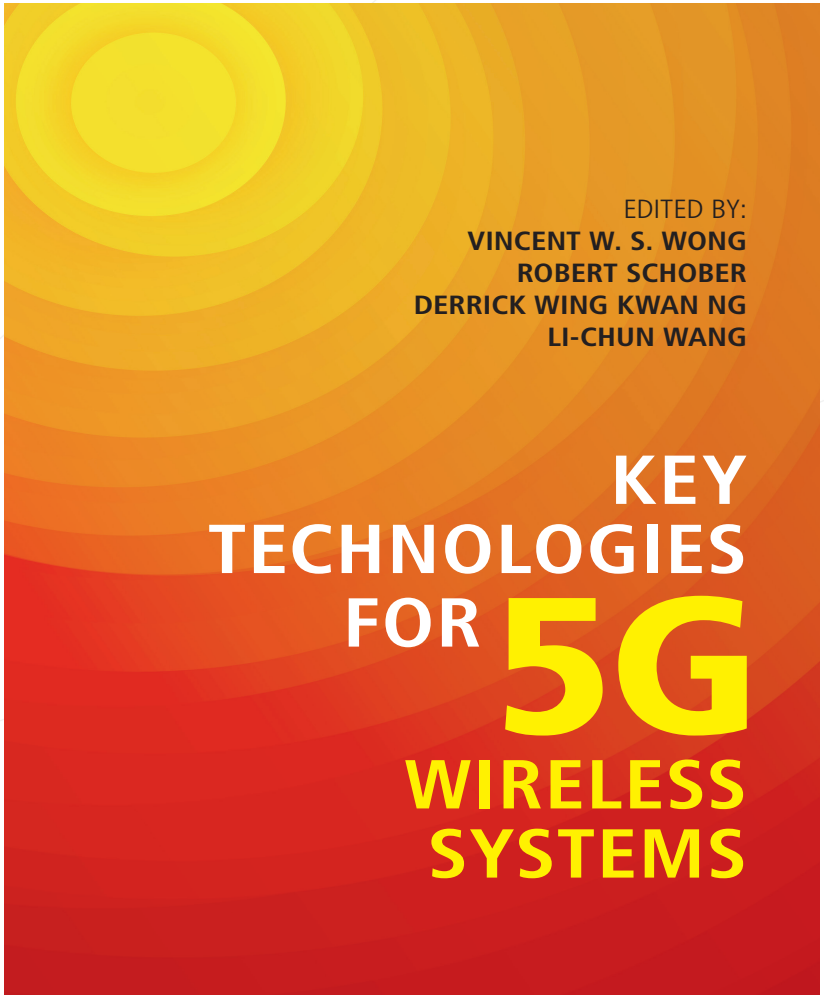

- Publisher: Cambridge University Press
- Hard copy will be available in April 2017

Questions

vincentw@ece.ubc.ca

http://www.ece.ubc.ca/~vincentw